CO2037 – Electrical Electronic Circuits

Operational Amplifier (Op-Amp)

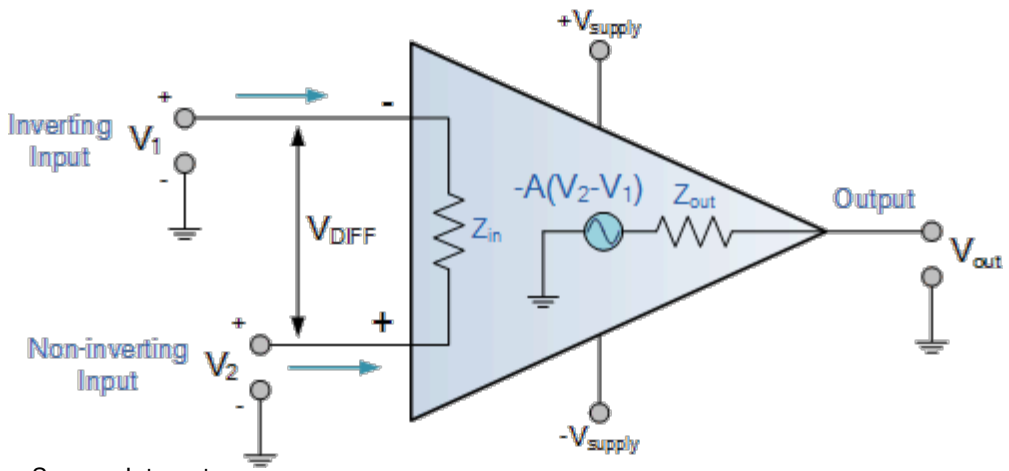

Image Source: Internet

Contents

- Operation
- Feedback Circuit
- Characteristics
- Practical Applications

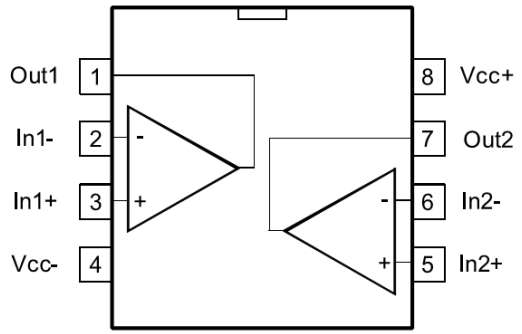

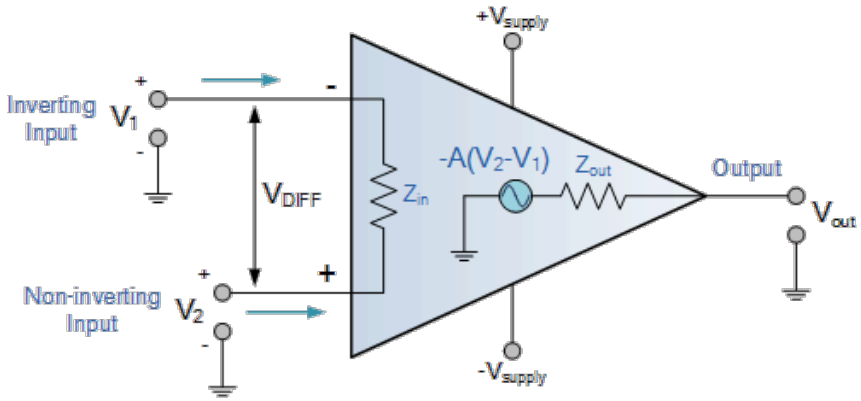

Basic Op-Amp

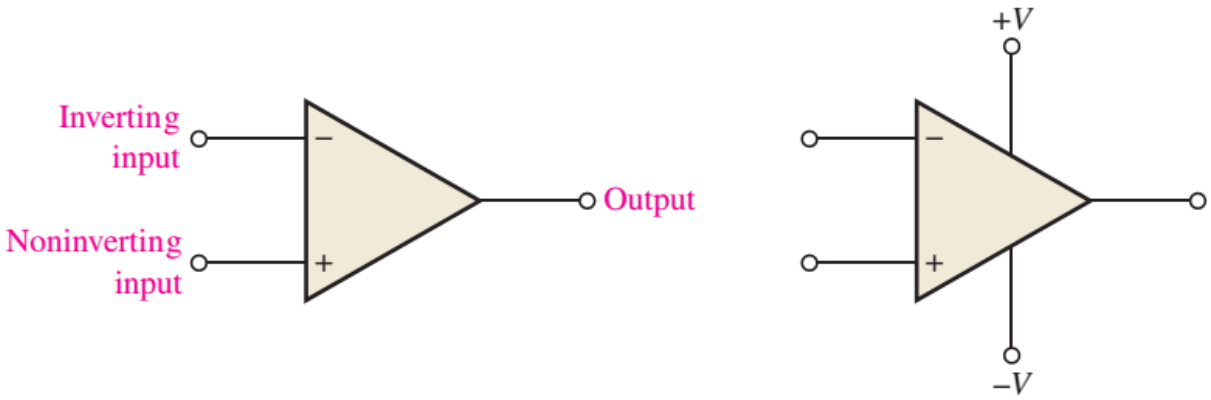

- Op-Amp = **Op**erational **Amp**lifier
- An Op-Amp consists of …

  Inverting input

  Noninverting input

  Output

https://www.youtube.com/watch?v=kiiA6WTCQn0

Op-Amp Gain

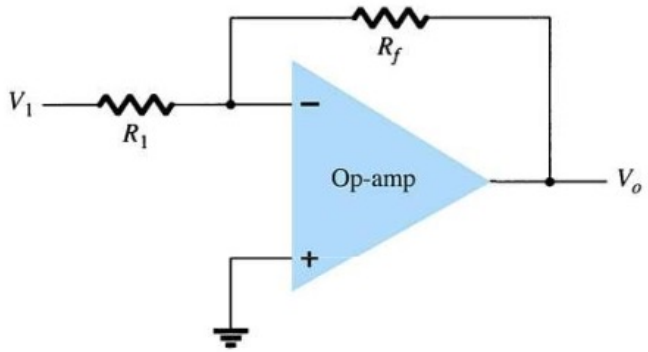

- Op-Amps have a very high gain. They can be connected open-loop or close-loop.

  Open-loop refers a configuration where there is no feedback from output back to the input. In the open-loop configuration, the gain can exceed 10^5.

  Closed-loop configuration reduces the gain. In order to control the gain of an op-amp it must have feedback. This feedback is a **negative feedback**. A **negative feedback** reduces the gain and improves many characteristics of the op-amp.

Op-Amp Models

- Practical Model

  Z_{in} is very large

  Z_{out} is small

  The gain $A_v = \frac{V_{out}}{V_{in}}$ in **open-loop** configuration is very high

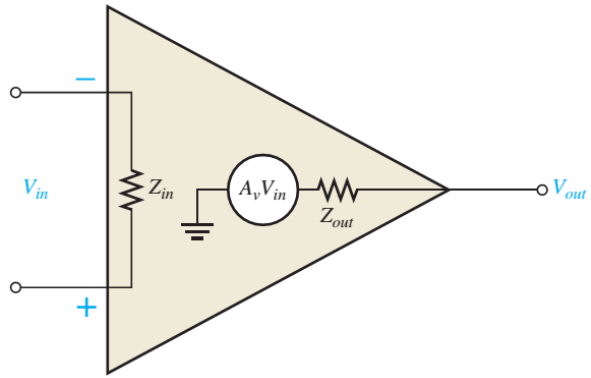

- Ideal Model (used for analysis)

  $Z_{in} = \infty \rightarrow I_{in+} = I_{in-} = 0$; $V_{in+} = V_{in-}$

  $Z_{out} = 0$

  The **open-loop gain**: $A_v = \frac{V_{out}}{V_{in}} = \infty$

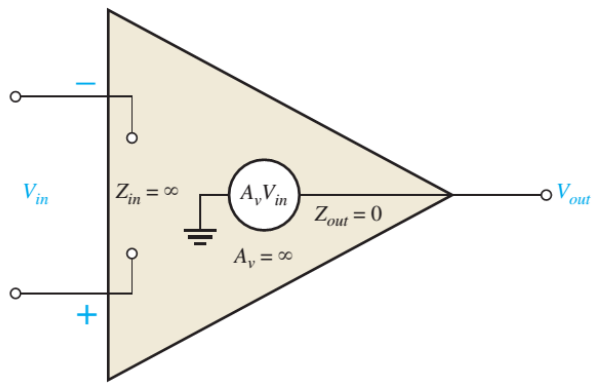

Op-Amp Operation

- The amplitude of V_{out} is higer than amplitude of V_{in}.

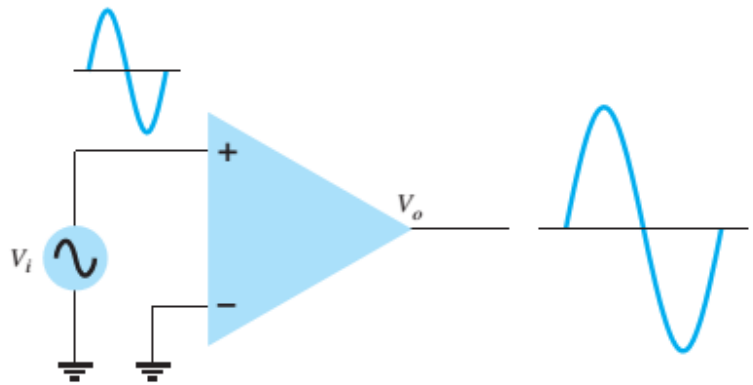

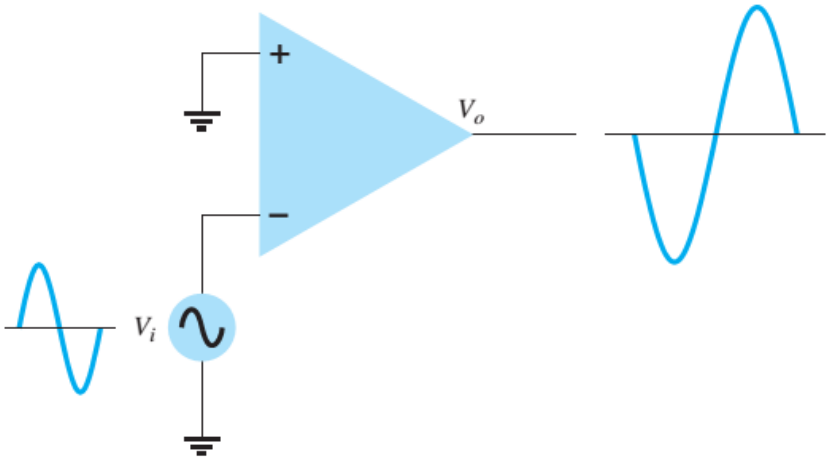

Op-Amp Operation

- The differential signal of 2 inputs is amplified.

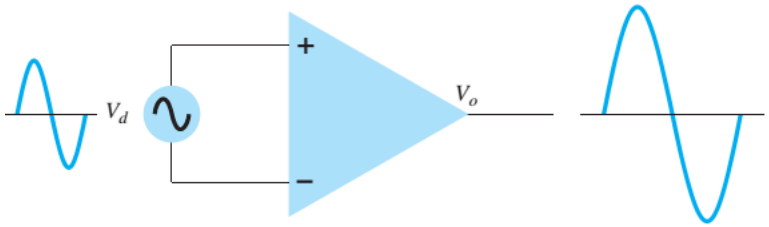

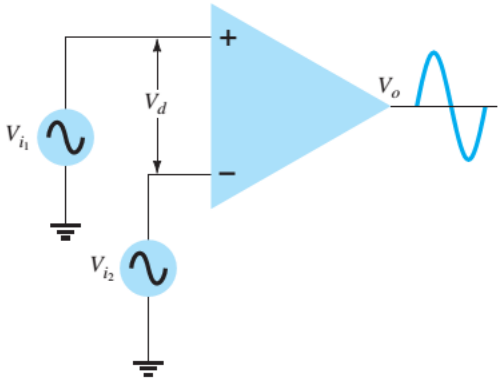

- When 2 inputs use common signal, the output is zero.

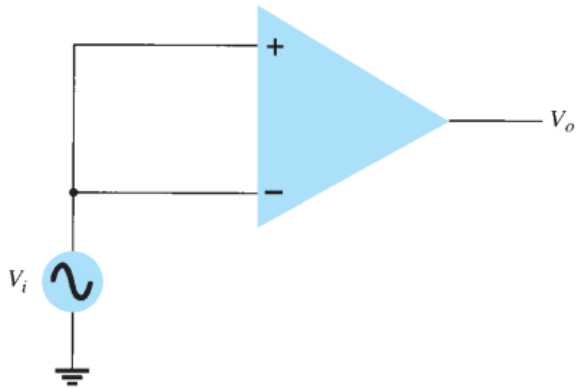

Feedback Circuits

- For the circuits without feedback (i.e. no connection between output and input), the open-loop gain is very large (>10^5).

- The output voltage will easily reach the saturation and the amplitude will be trimmed.

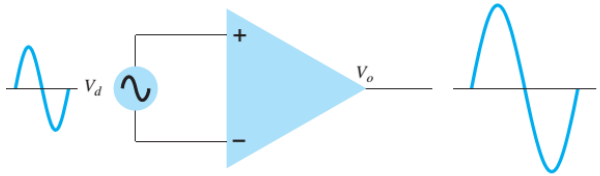

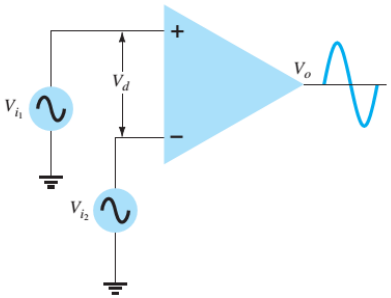

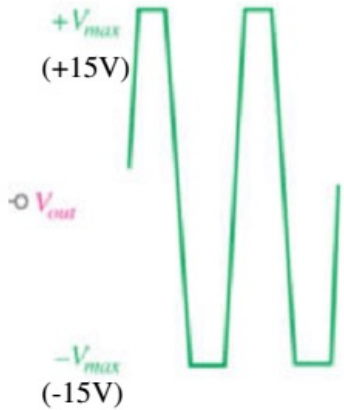

Feedback Circuits

- In order to control the gain of an op-amp it must have feedback. This feedback is a **negative feedback**. A **negative feedback** reduces the gain and improves many characteristics of the op-amp.

Inverting Amplifier

$$V_o = \frac{-R_f}{R_1} V_1$$

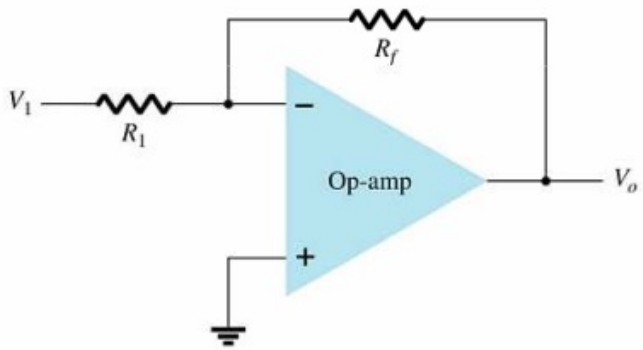

Noninverting Amplifier

$$V_o = (1 + \frac{R_f}{R_1})V_1$$

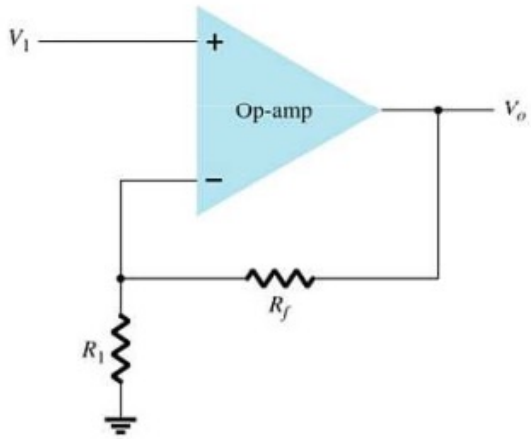

Inverting Op-Amp Gain

Gain can be determined from external resistors: R_f and R_1

$$A_v = \frac{V_o}{V_i} = \frac{R_f}{R_1}$$

Unity gain—voltage gain is 1

$$R_f = R_1$$

$$A_v = \frac{-R_f}{R_1} = -1$$

The negative sign denotes a 180° phase shift between input and output.

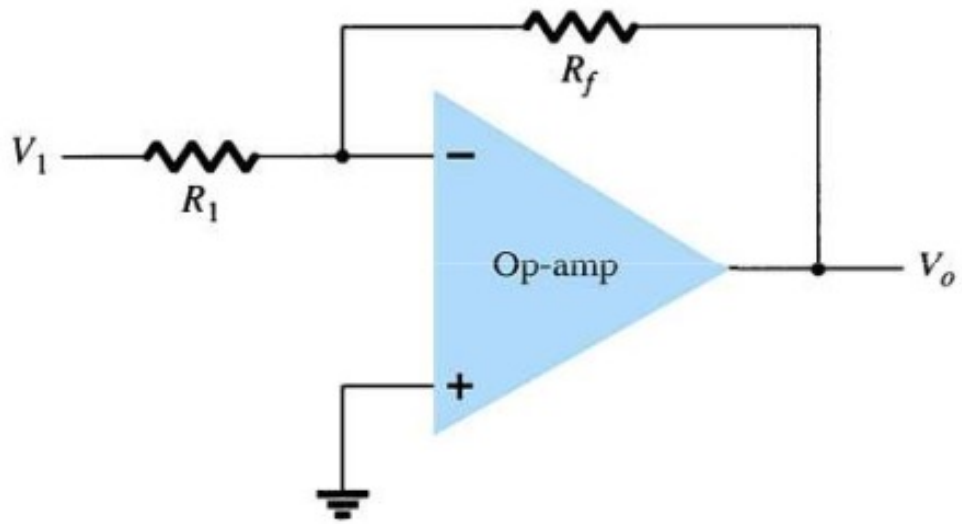

Constant Gain—R_f is a multiple of R_1

https://www.youtube.com/watch?v=AuZ00cQ0UrE

Non-Inverting Op-Amp

- https://www.youtube.com/watch?v=uyOfonR_rEw

Noninverting Amplifier

$$V_o = (1 + \frac{R_f}{R_1})V_1$$

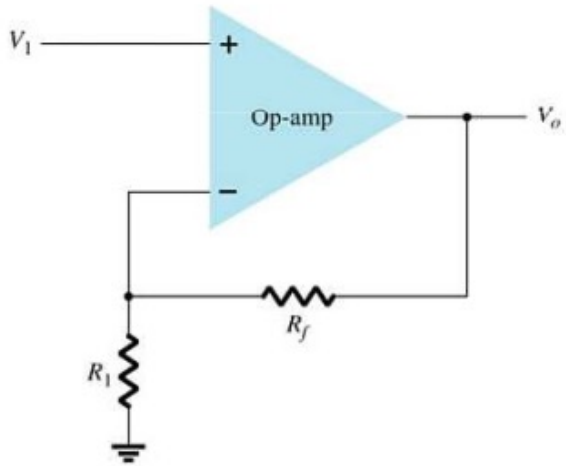

Op-Amp Datasheet

- **IC LM358**

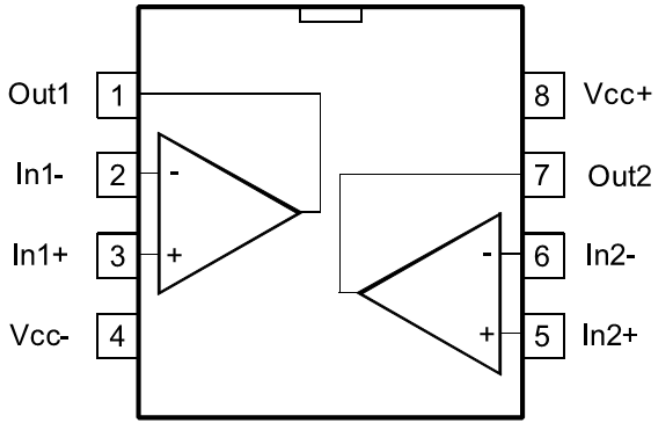

DFN8 2x2

MiniSO8

TSSOP8

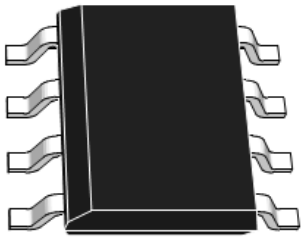

SO8

Op-Amp Datasheet (IC LM358)

- Maximum power supply: ±22V
- Maximum input voltage: ±15V
- Maximum differential input voltage: ±30V

Absolute maximum ratings over operating free-air temperature range (unless otherwise noted)

	uA741	UNIT
Supply voltage V_{CC+}	22	V
Supply voltage V_{CC-}	−22	V
Differential input voltage	±30	V
Input voltage any input	±15	V
Voltage between either offset null terminal (N1/N2) and V_{CC-}	±0.5	V
Duration of output short-circuit	unlimited	
Continuous total power dissipation at (or below) 25°C free-air temperature	500	mW
Operating free-air temperature range	−40 to 85	°C
Storage temperature range	−65 to 150	°C
Lead temperature 1,6 mm (1/16 in.) from case for 60 seconds	300	°C
Lead temperature 1,6 mm (1/16 in.) from case for 10 seconds	260	°C

Op-Amp Datasheet

- **IC 741**

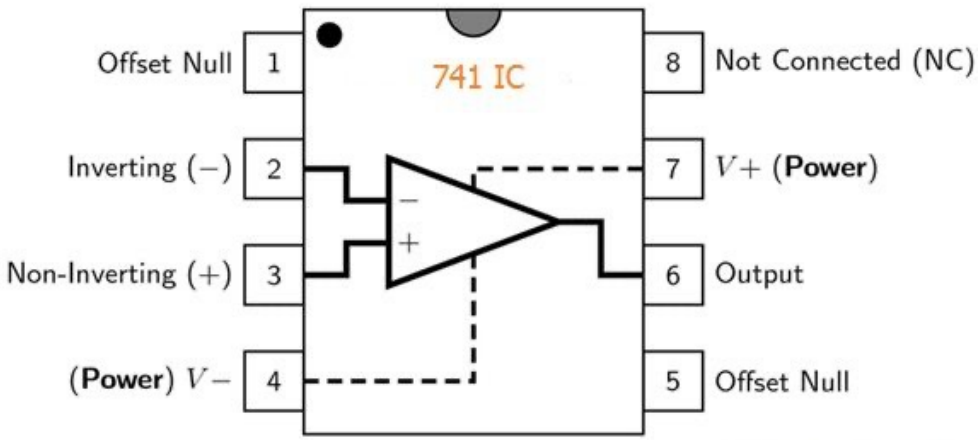

741 Op-Amp IC

Op-Amp Datasheet (μA741)

μA741 Electrical Characteristics: $V_{CC} = \pm 15$ V, $T_A = 25°C$

Characteristic	Minimum	Typical	Maximum	Unit
V_{IO} Input offset voltage		1	6	mV
I_{IO} Input offset current		20	200	nA
I_{IB} Input bias current		80	500	nA
V_{ICR} Common-mode input voltage range	±12	±13		V
V_{OM} Maximum peak output voltage swing	±12	±14		V
A_{VD} Large-signal differential voltage amplification	20	200		V/mV
r_i Input resistance	0.3	2		MΩ
r_o Output resistance		75		Ω
C_i Input capacitance		1.4		pF
CMRR Common-mode rejection ratio	70	90		dB
I_{CC} Supply current		1.7	2.8	mA
P_D Total power dissipation		50	85	mW

- A_{VD} – Large-signal differential voltage amplification
  - 200V/mV = 200.000
- r_i – input resistance: 2MΩ
- r_o – output resistance: 75Ω

Output Voltage Threshold

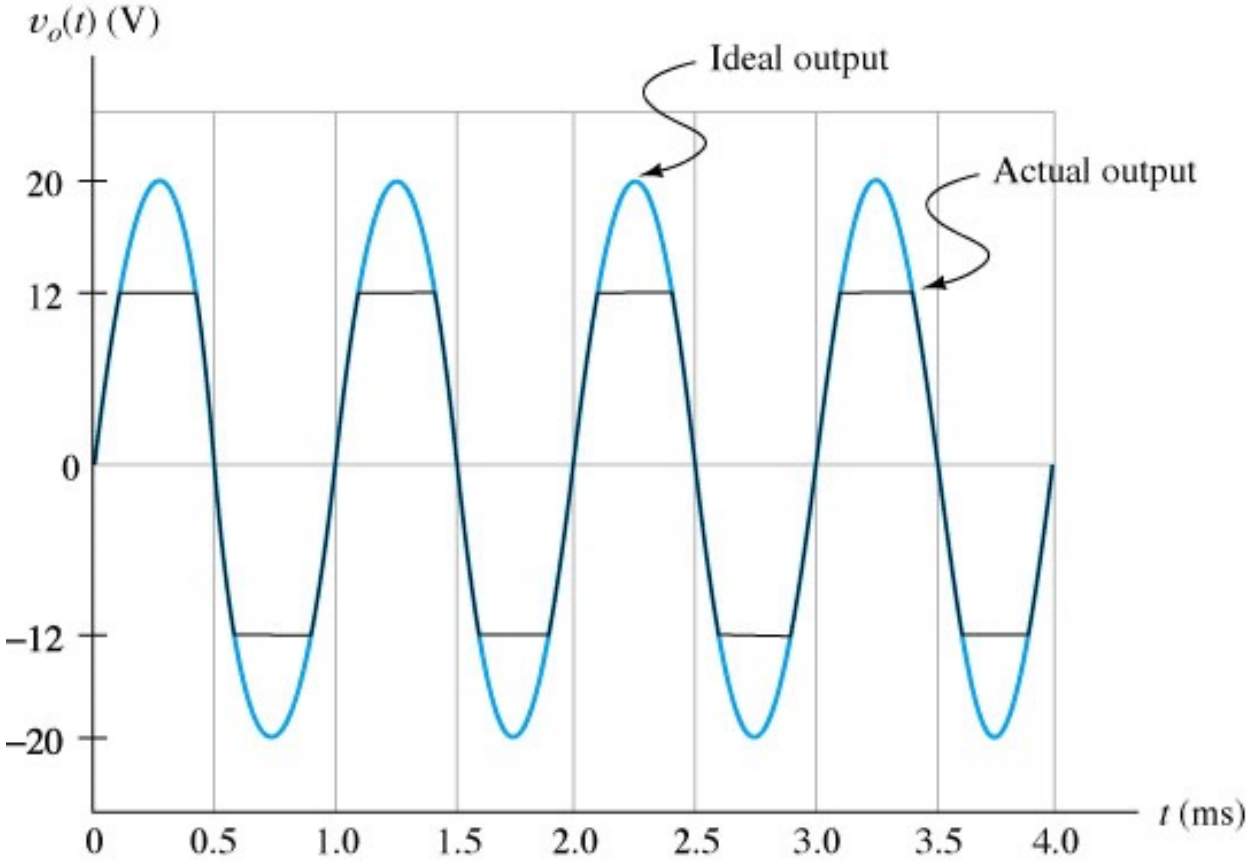

Practical Op-Amp Circuits

- Unity Follower
- Summing Amplifier
- Integrator
- Differentiator
- Comparator

Unity Follower

$$V_o = V_1$$

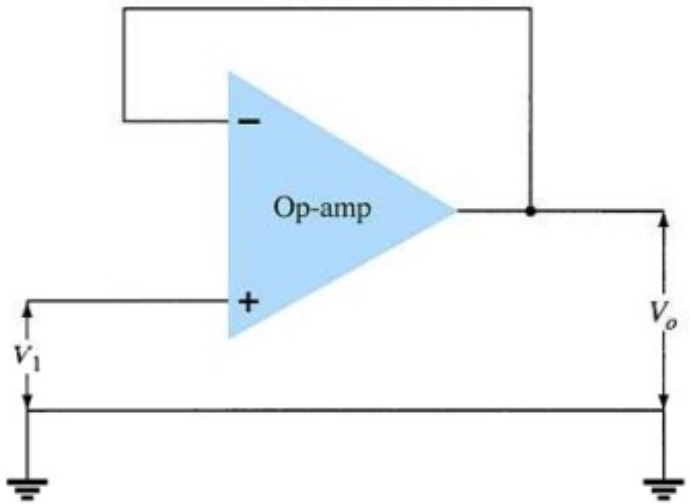

Summing Amplifier

Because the op-amp has a high input impedance, the multiple inputs are treated as separate inputs.

$$V_o = -\left(\frac{R_f}{R_1}V_1 + \frac{R_f}{R_2}V_2 + \frac{R_f}{R_3}V_3\right)$$

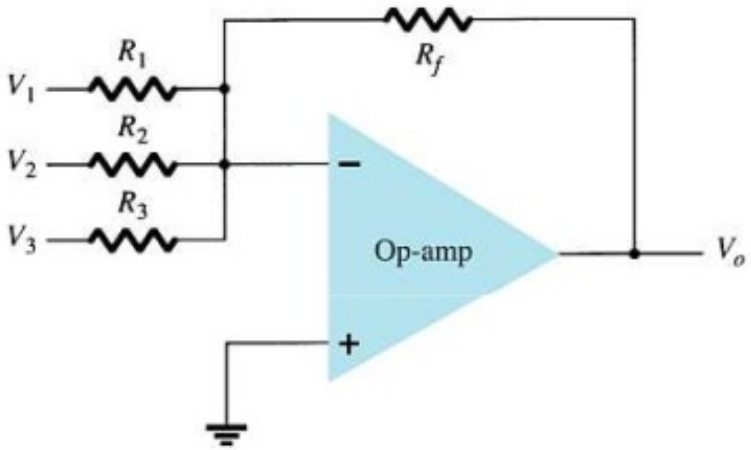

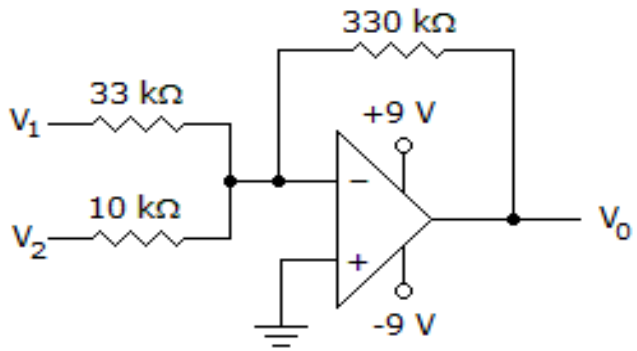

https://www.youtube.com/watch?v=jsKSfaFQ4d4

Integrator

The output is the integral of the input. Integration is the operation of summing the area under a waveform or curve over a period of time. This circuit is useful in low-pass filter circuits and sensor conditioning circuits.

$$v_o(t) = -\frac{1}{RC}\int v_1(t)dt$$

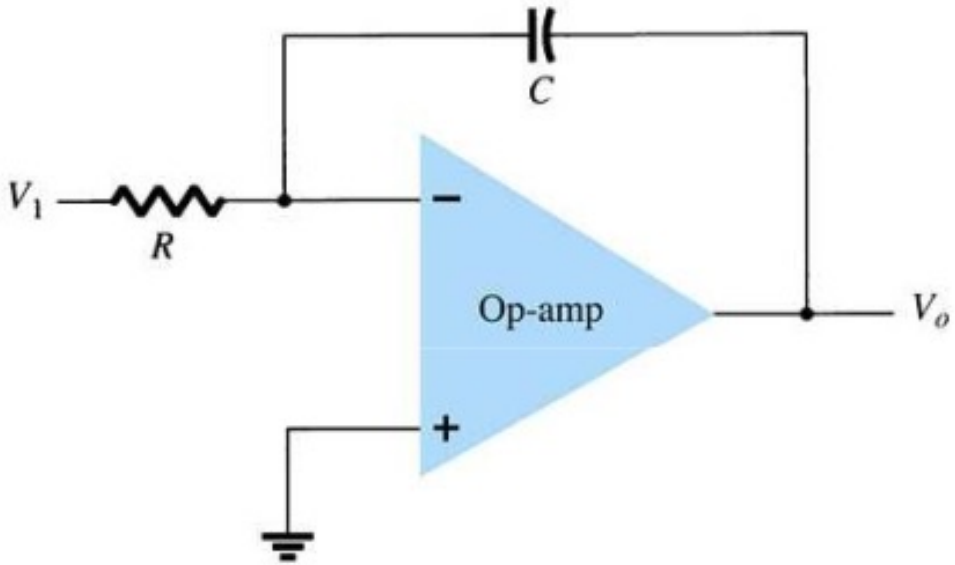

Differentiator

The differentiator takes the derivative of the input. This circuit is useful in high-pass filter circuits.

$$v_o(t) = -RC\frac{dv_1(t)}{dt}$$

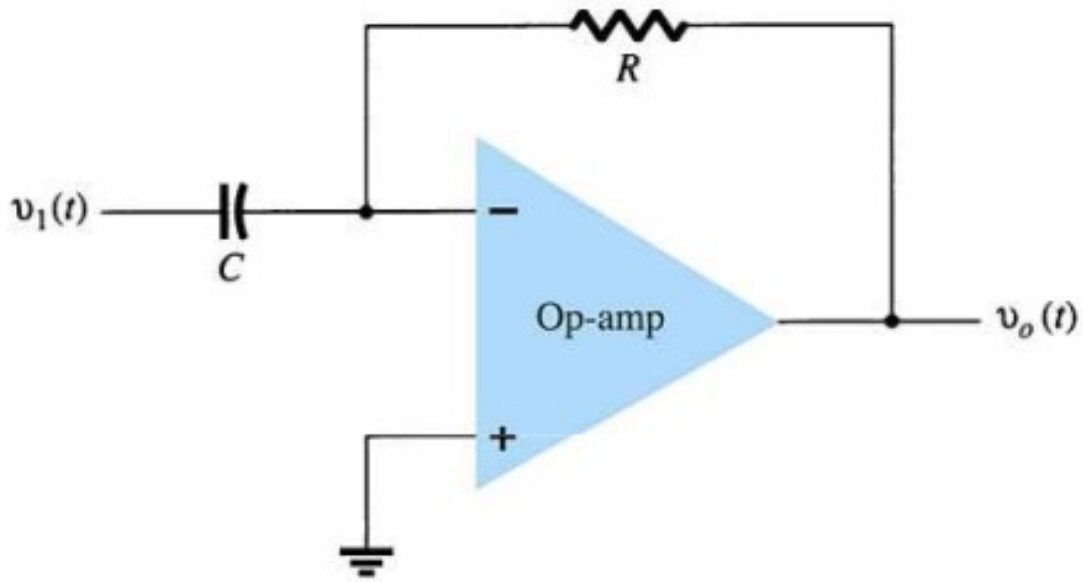

Comparator

- $V_{out} = +V_{out(max)}$ when V+ > V-
  $V_{in} > V_{REF}$
- $V_{out} = -V_{out(max)}$ when V+ < V-
  $V_{in} < V_{REF}$

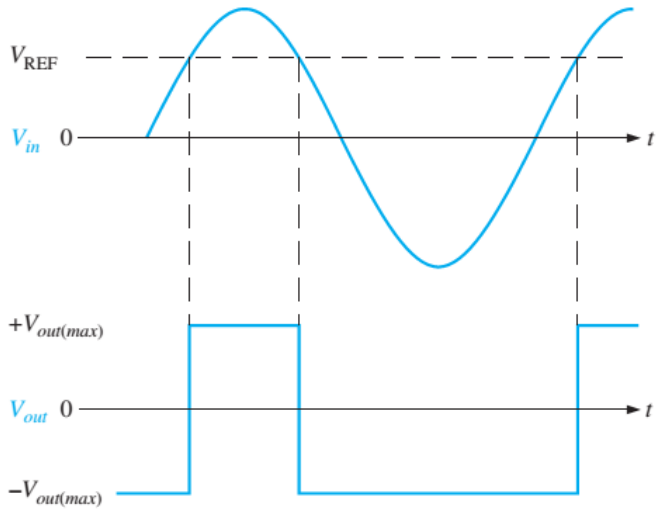

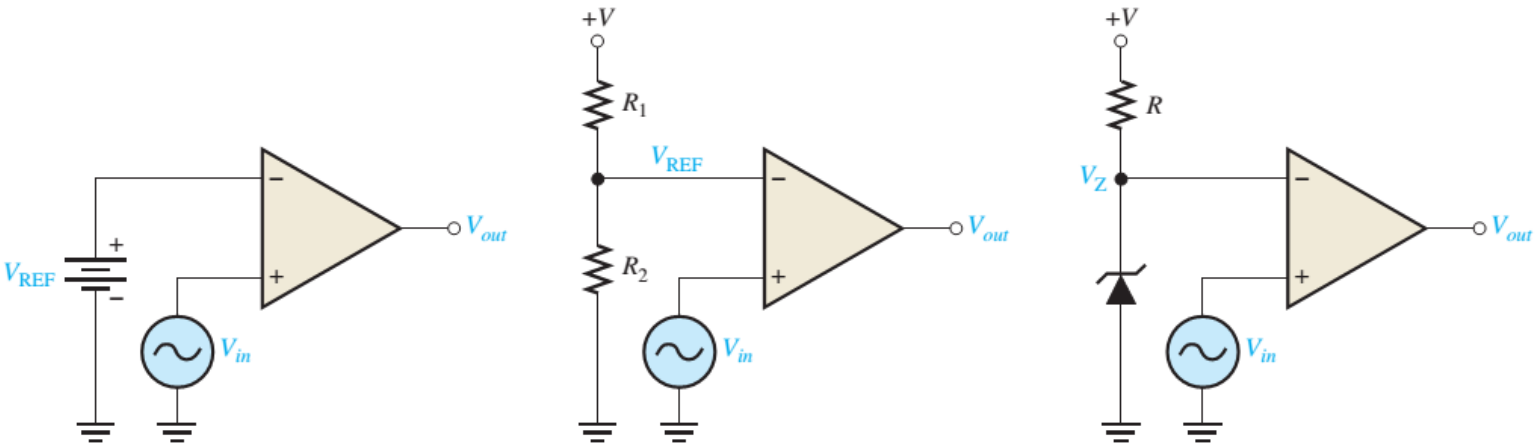

Noisy Comparator

- Unexpected pulses

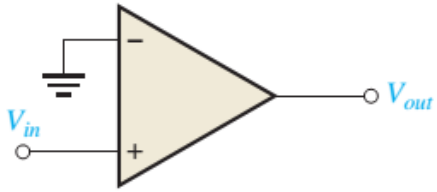

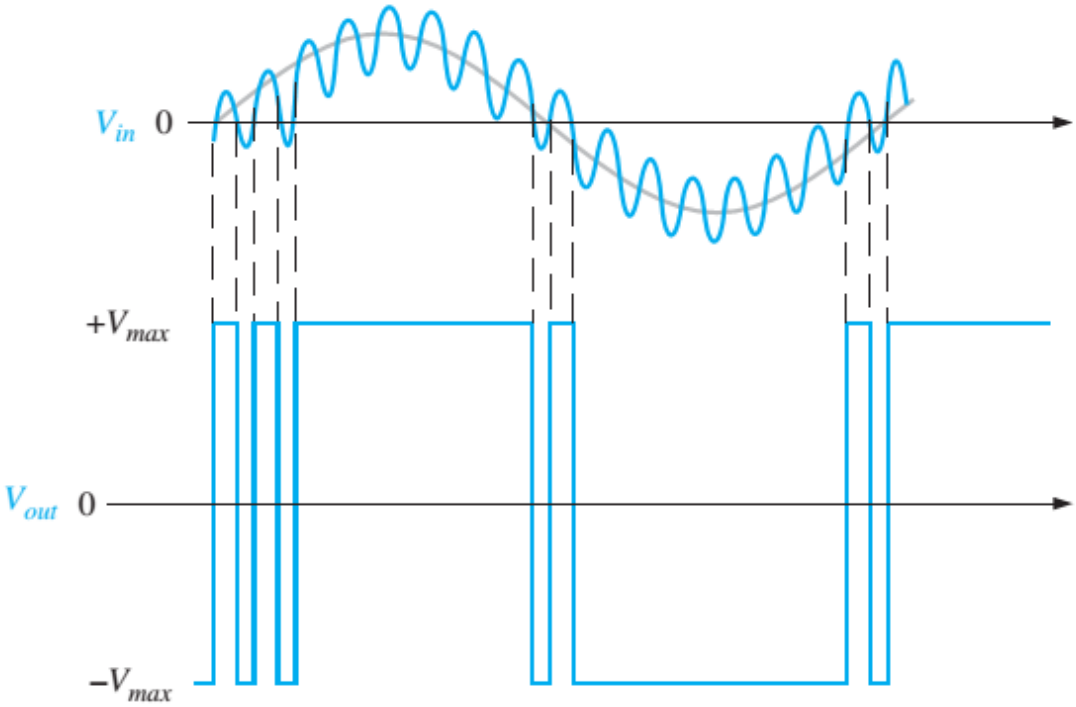

Noiseless Comparator

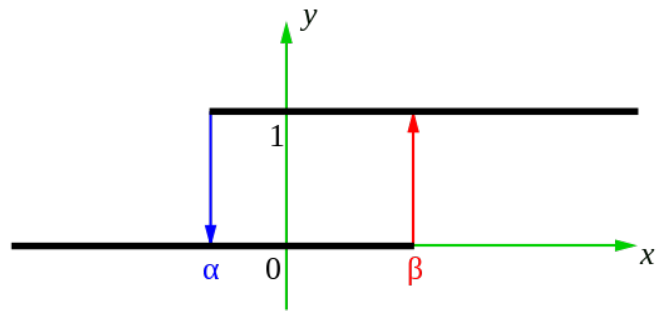

- Hysteresis
  - 0 →1 if V_{in} is greater than β threshold
  - 1 → 0 if V_{in} is smaller than α threshold

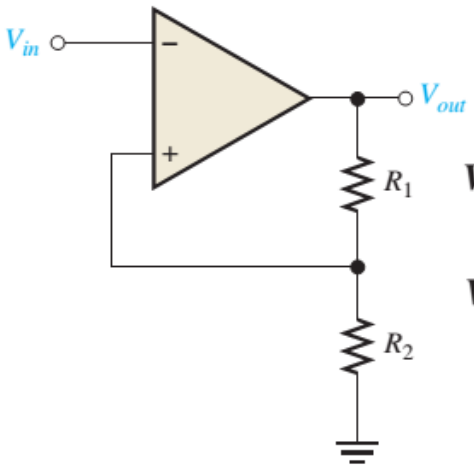

$$V_{UTP} = \frac{R_2}{R_1 + R_2}(+V_{out(max)})$$

$$V_{LTP} = \frac{R_2}{R_1 + R_2}(-V_{out(max)})$$

$$V_{HYS} = V_{UTP} - V_{LTP}$$

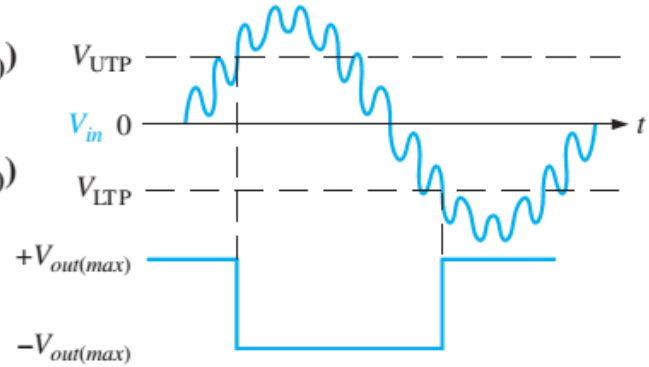

Application (1)

- Protection Circuit using Op-Amp Comparator

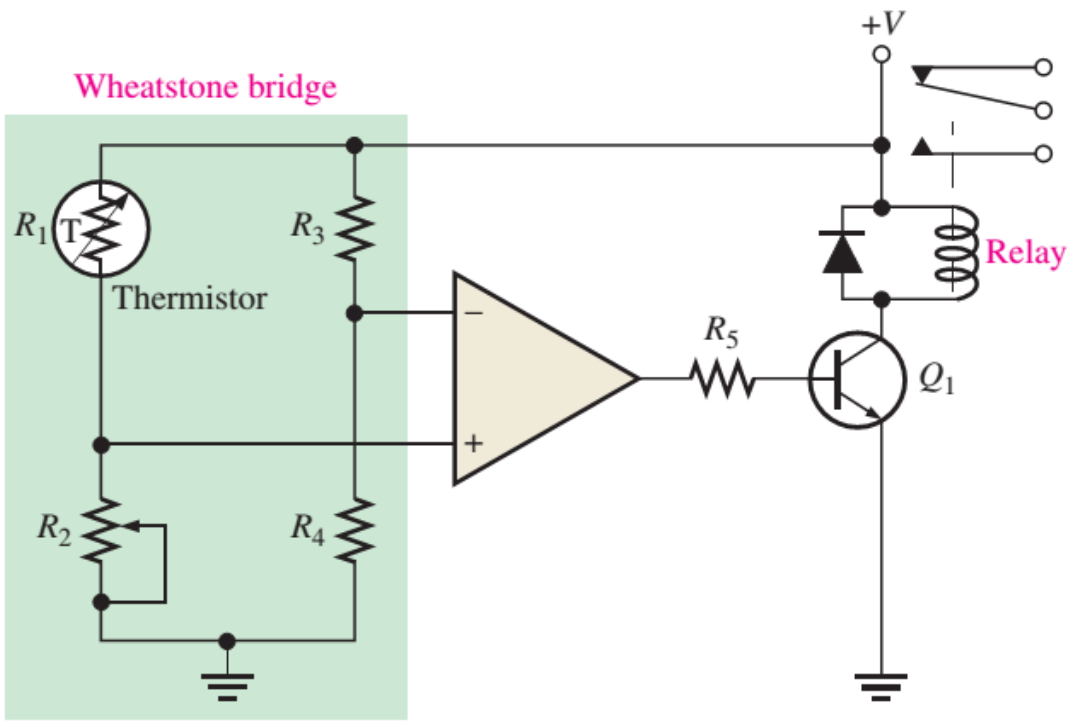

Application (2)

- Analog to Digital Conversion

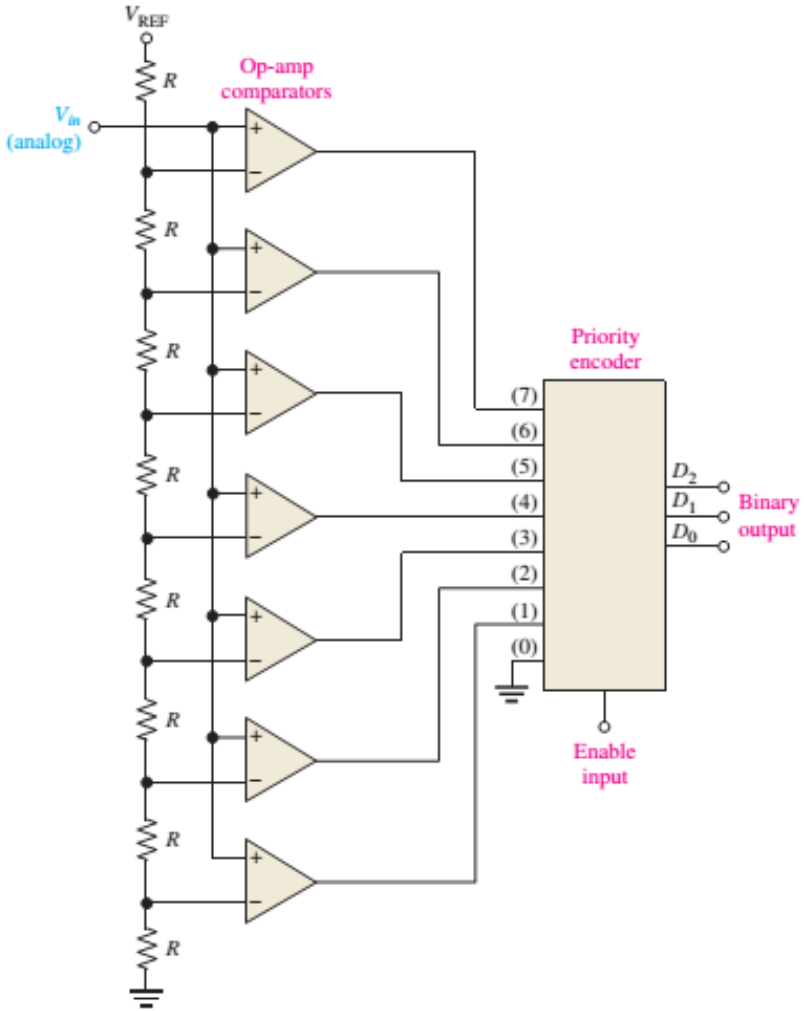

IC 555

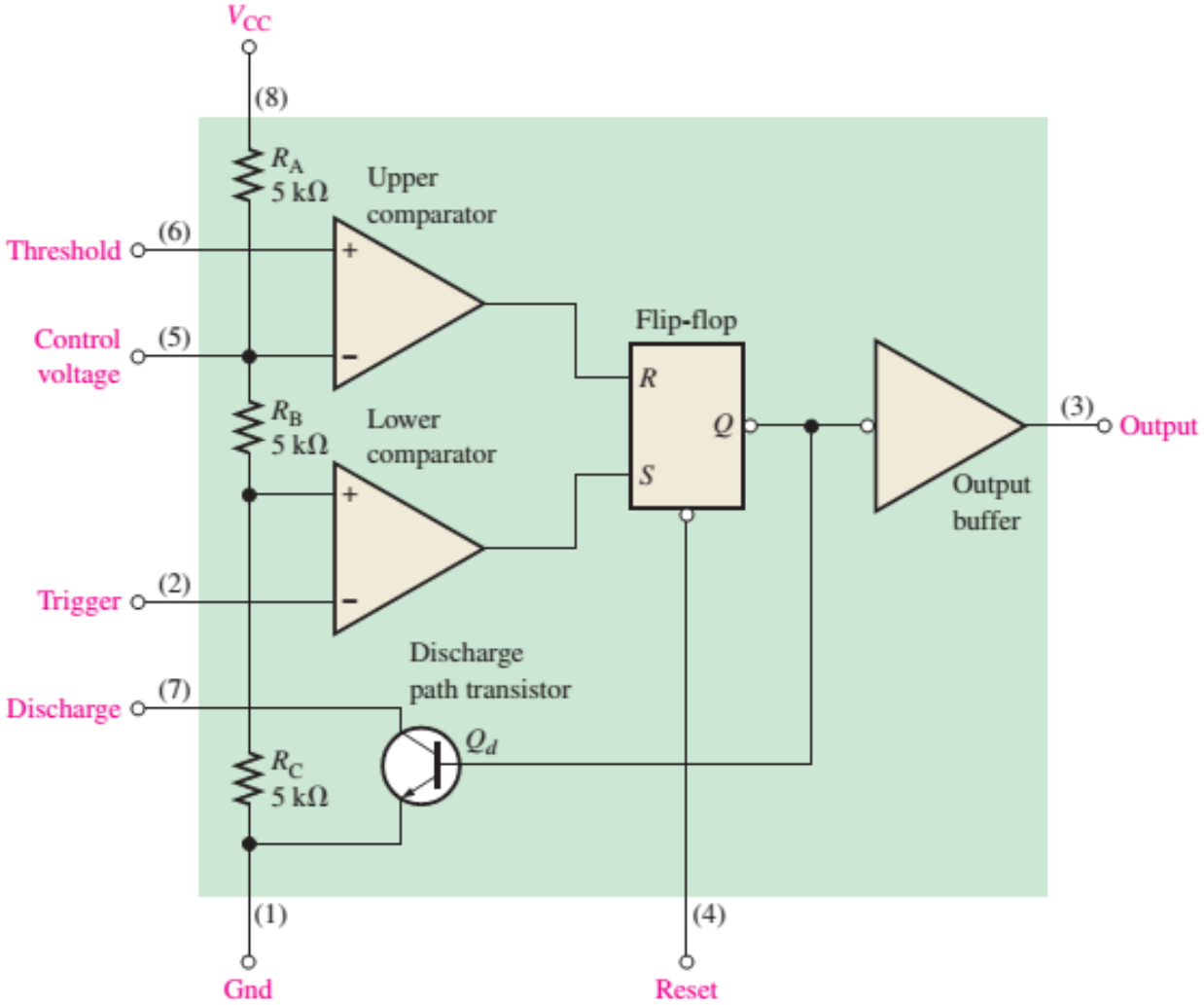
V_{CC}
(8)
R_A
5 kΩ
Upper
comparator
Threshold
(6)
Control
voltage
(5)
Flip-flop
R
Q
S
R_B
5 kΩ
Lower
comparator
(3)
Output
Output
buffer
Trigger
(2)
Discharge
path transistor
Discharge
(7)
Q_d
R_C
5 kΩ
(1)
(4)
Gnd
Reset

IC555 – Clock Pulse Generator

$$\text{Duty cycle} = \left(\frac{t_H}{T}\right)100\% = \left(\frac{t_H}{t_H + t_L}\right)100\%$$

$$\textbf{Duty cycle} = \left(\frac{R_1 + R_2}{R_1 + 2R_2}\right)100\%$$

$$f_r = \frac{1.44}{(R_1 + 2R_2)C_{ext}}$$

$$t_H = 0.694(R_1 + R_2)C_{ext}$$

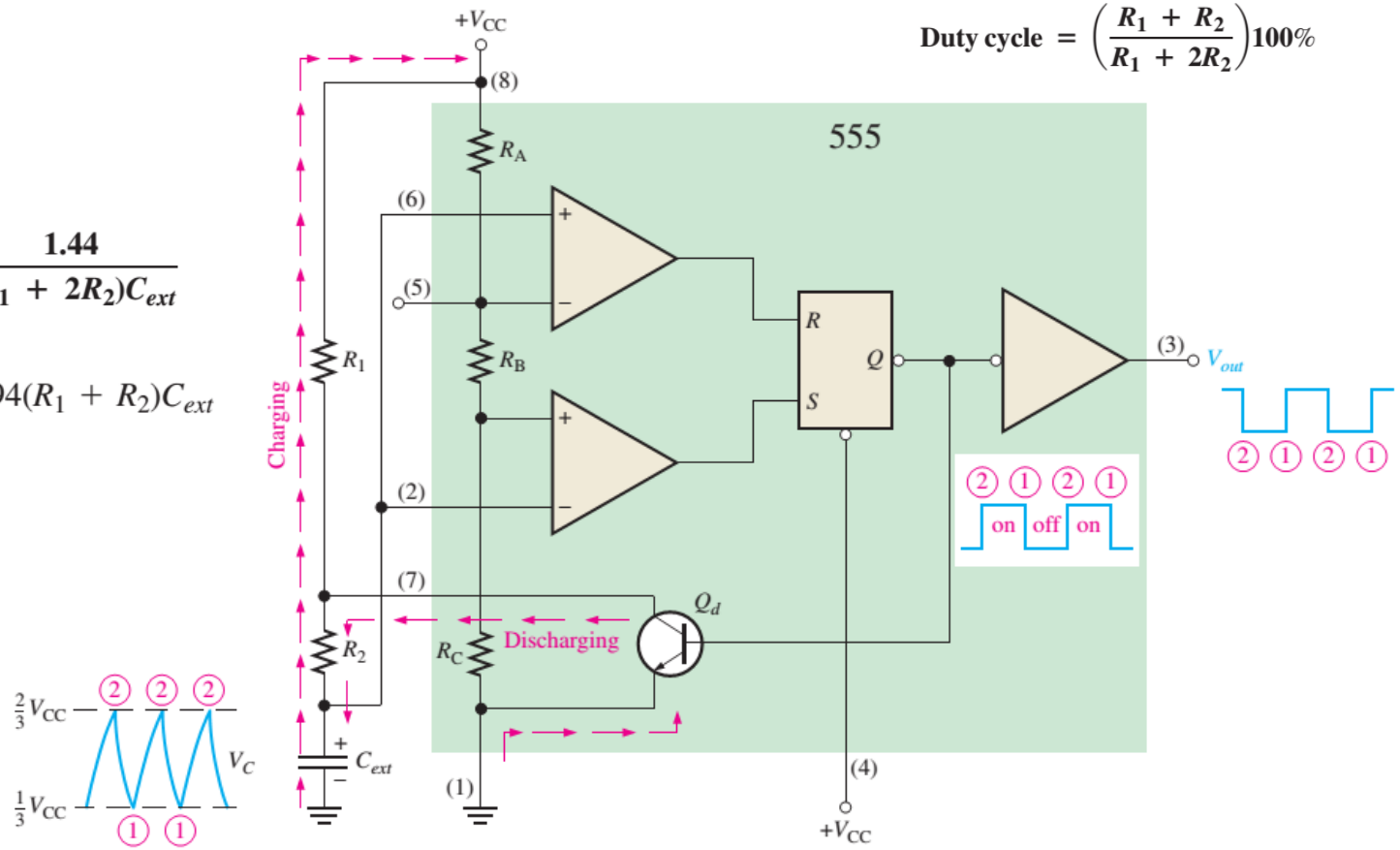

IC555 – Delay Circuit

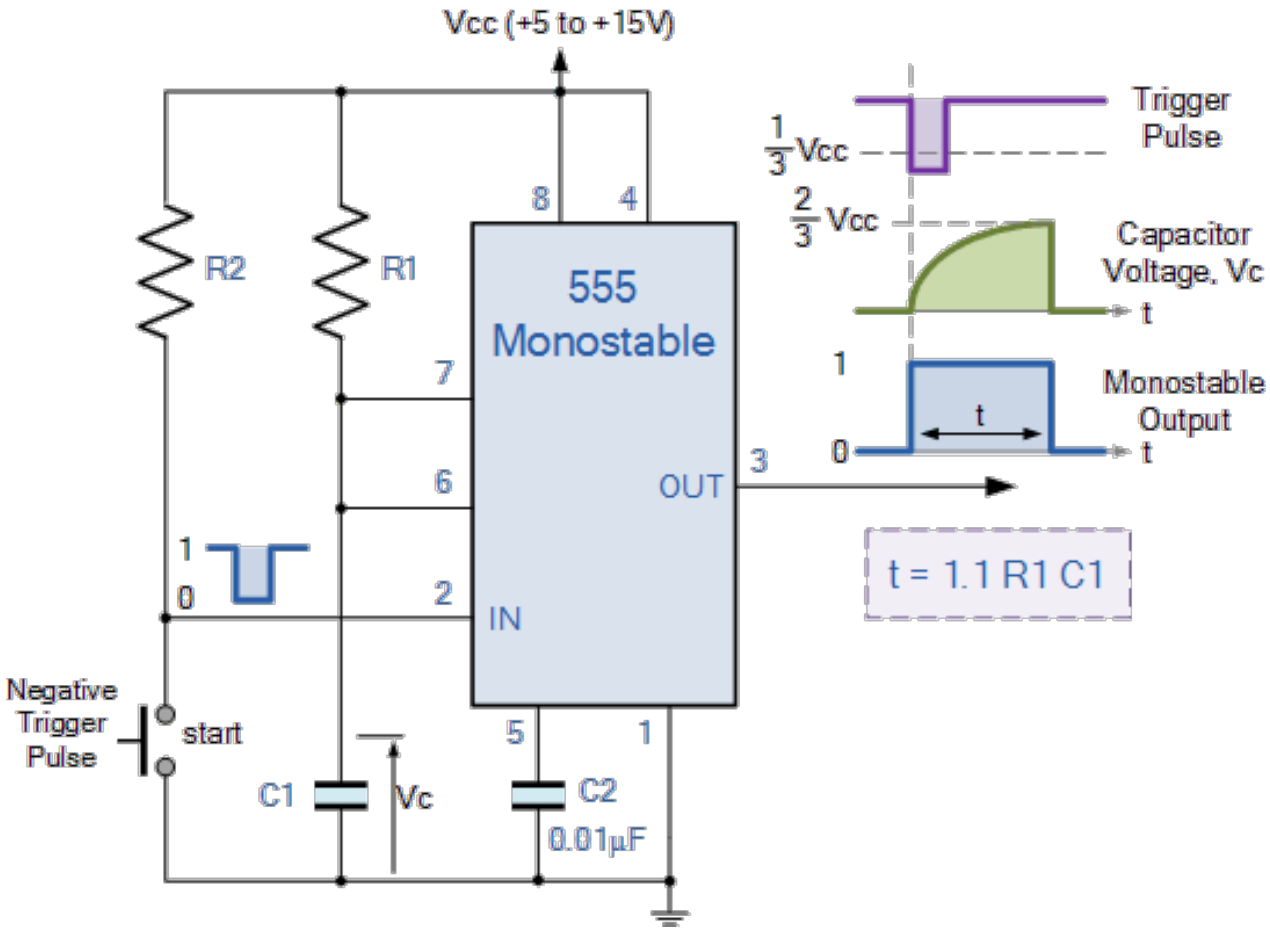

Exercise 1

- Compute the output voltage in the following circuits using **ideal op-amp**

A)

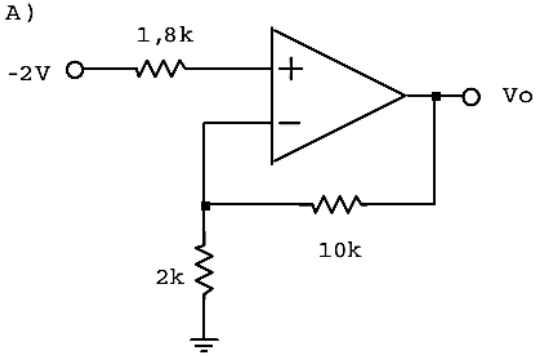

B)

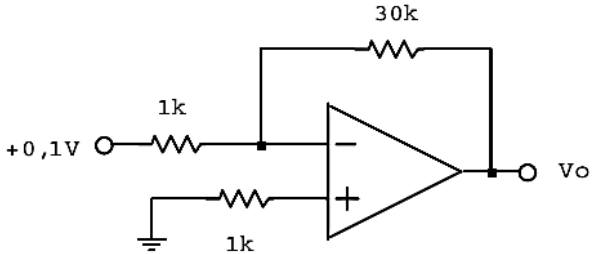

Inverting Amplifier

$$V_o = \frac{-R_f}{R_1} V_1$$

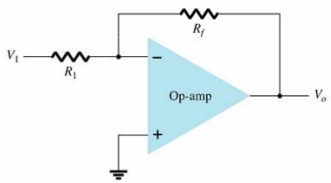

Noninverting Amplifier

$$V_o = (1 + \frac{R_f}{R_1})V_1$$

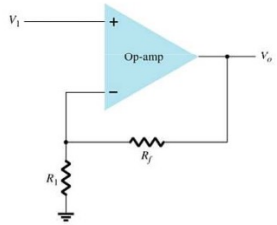

C)

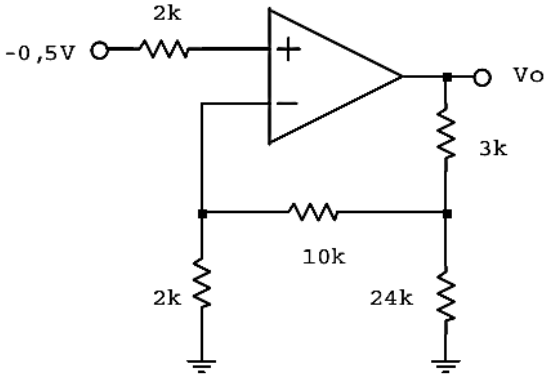

D)

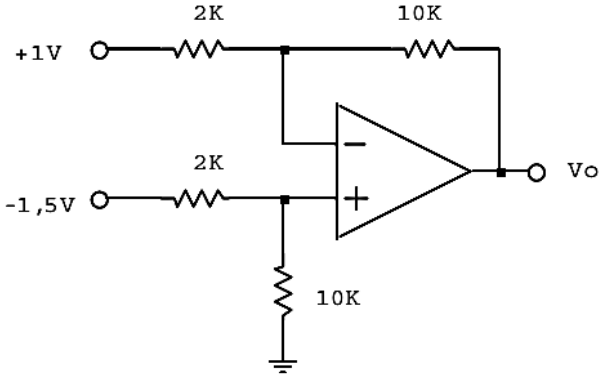

Exercise 2

- Characteristics of an Op-Amp is given in the following table. The power supply is ±15V.

Parameter	Minimum	Typical	Maximum
Output Voltage	±12V	±13.5V	
Input Voltage	±11V	±12.5V	
Output current of shorted-circuit	±12mA	±20mA	

- Determine V_X

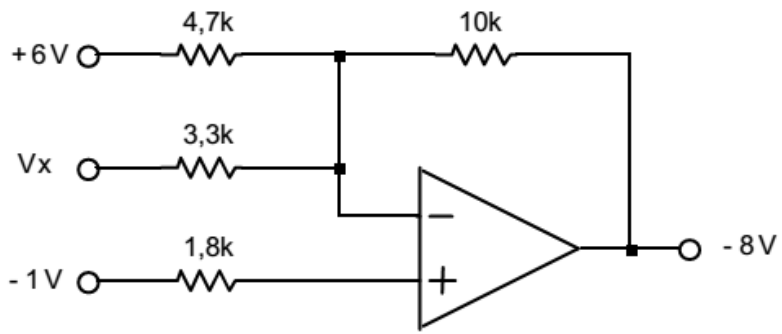

Exercise 3

- Characteristics of an Op-Amp is given in the following table. The power supply is ±15V.

Parameter	Minimum	Typical	Maximum
Output Voltage	±12V	±13.5V	
Input Voltage	±11V	±12.5V	
Output current of shorted-circuit	±12mA	±20mA	

- Determine V_o when V_{in}=±6V

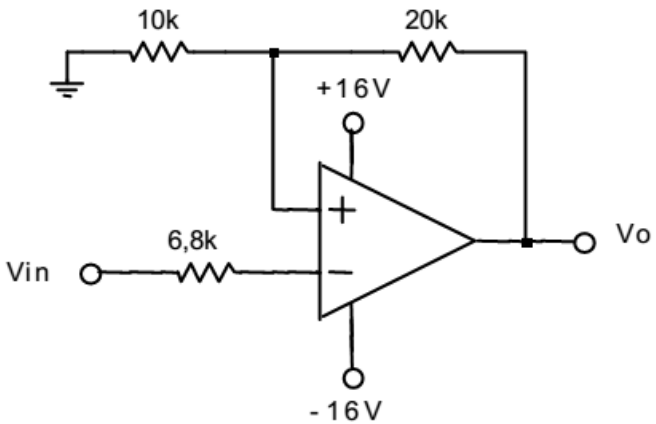

Exercise 4

- Characteristics of an Op-Amp is given in the following table. The power supply is ±15V.

Parameter	Minimum	Typical	Maximum
Output Voltage	±12V	±13.5V	
Input Voltage	±11V	±12.5V	
Output current of shorted-circuit	±12mA	±20mA	
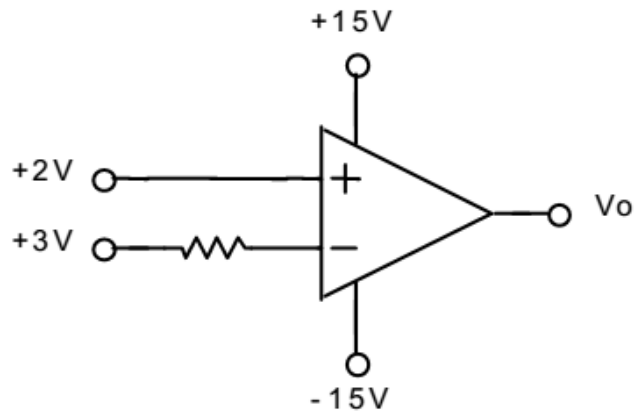
- Determine V_o